Connection Example

VLT® AutomationDrive Software: 4.54

Closed loop operation from 0 - 300kPa pressure transmitter with 0-10V output. If the transmitter output is 4-20m change the DIP switch settings behind the LCP.

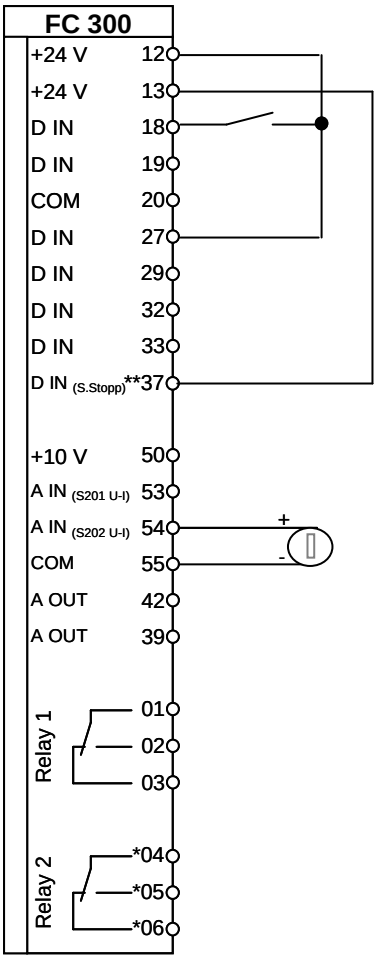

Start / Stop

Coast Inverse

Safety Stop

Pressure transducer
0-10V (or 4-20mA)

Relevant Parameters		
Par.	Function	Settings
0-02	Motor Speed Unit	[1] Hz
0-21	Display 1.2 small	[1652] Feedback
1-00	Configuration mode	[3] Process
1-05	Local mode config	[0] Speed open loop
3-01	Unit	[73] kPa
3-02	Min reference	0
3-03	Max reference	300
4-14	Motor high limit	50Hz
3-41	Ramp up time	20s
3-42	Ramp down time	20s
3-10.0	Preset reference	50%
7-20	Feedback source	[2] Analog input 54
6-24	Min feedback	0
6-25	Max Feedback	300
7-30	Normal / Inverse	[0] Normal
7-32	PID start frequency	10
7-33	Proportional gain	2
7-34	Integral time	10

NOTE: Erstellt von: Schulung

All settings are based on factory settings.
It is recommended to set all the motor parameters in Par. 1-20 to 1-26 and then perform Automatic Motor Adaption (AMA) in Par. 1-29.