Connection Example

VLT® AutomationDrive Software: 4.54

A fan is to be controlled between 10 to 50Hz. A 0-10V DC potentiometer is used as the speed reference.

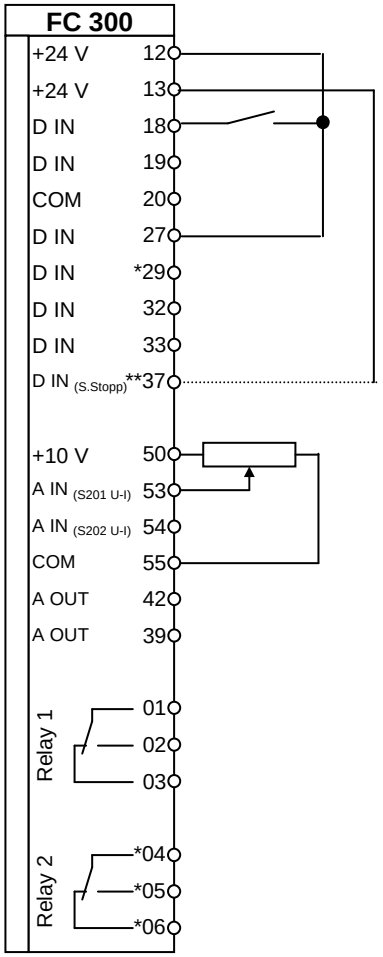

Start / Stop

Coast Inverse

Safety Stop

Analog Input 0-10V DC

Relevant Parameters		
Par.	Function	Settings
0-02	Motor Speed Unit	[1] Hz
3-00	Reference Range	[0] Min - Max
3-02	Minimum Reference	10Hz
3-03	Maximum Reference	50Hz

* = Werkseinstellung

NOTE: Erstellt von: Schulung

All settings are based on factory settings.
It is recommended to set all the motor parameters in Par. 1-20 to 1-26 and then perform Automatic Motor Adaption (AMA) in Par. 1-29.